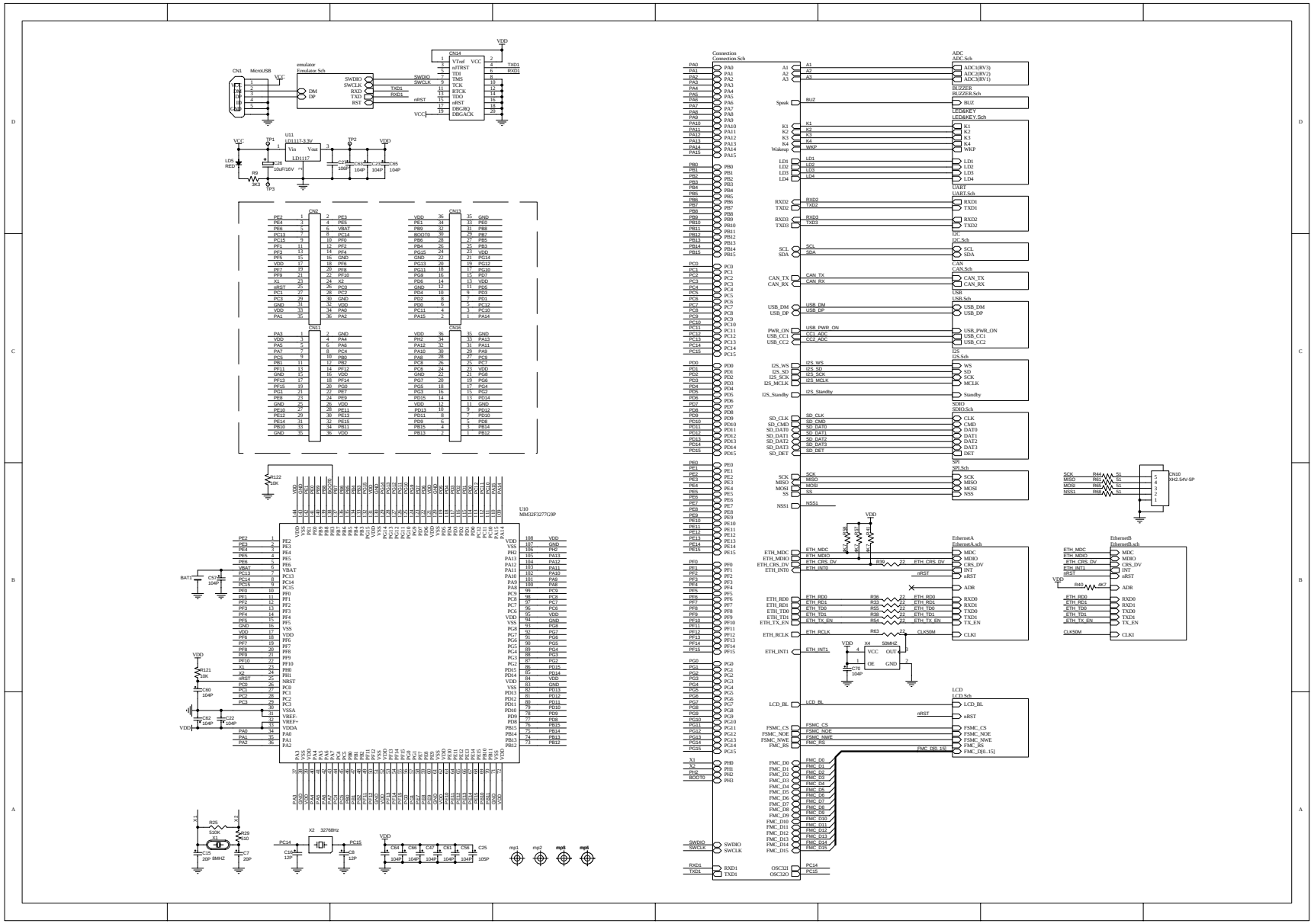
CN1 MicroUSB
emulator
Emulator.Sch
CN14
U11
LD1117-3.3V
LD1117
CN2
CN13
CN11
CN16
U10
MM32F3277G9P
X2 32768Hz
Connection
Connection.Sch
ADC
ADC.Sch
BUZZER
BUZZER.Sch
LED&KEY
LED&KEY.Sch
UART
UART.Sch
I2C
I2C.Sch
CAN
CAN.Sch
USB
USB.Sch
I2S
I2S.Sch
SDIO
SDIO.Sch
SPI
SPI.Sch
EthernetA
EthernetA.sch
EthernetB
EthernetB.sch
LCD
LCD.Sch

TF card

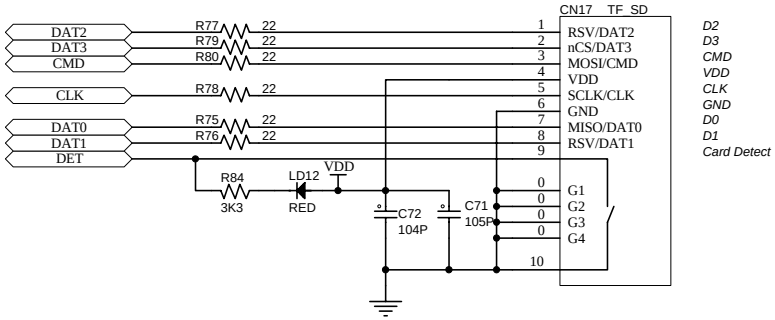
CN17 TF_SD
DAT2
DAT3
CMD
CLK
DAT0
DAT1
DET
R77 22
R79 22
R80 22
R78 22
R75 22
R76 22
R84
3K3
LD12
RED
VDD
C72
104P
C71
105P
1 RSV/DAT2
2 nCS/DAT3
3 MOSI/CMD
4 VDD
5 SCLK/CLK
6 GND
7 MISO/DAT0
8 RSV/DAT1
9
0 G1
0 G2
0 G3
0 G4
10
D2
D3
CMD
VDD
CLK
GND
D0
D1
Card Detect

I2S

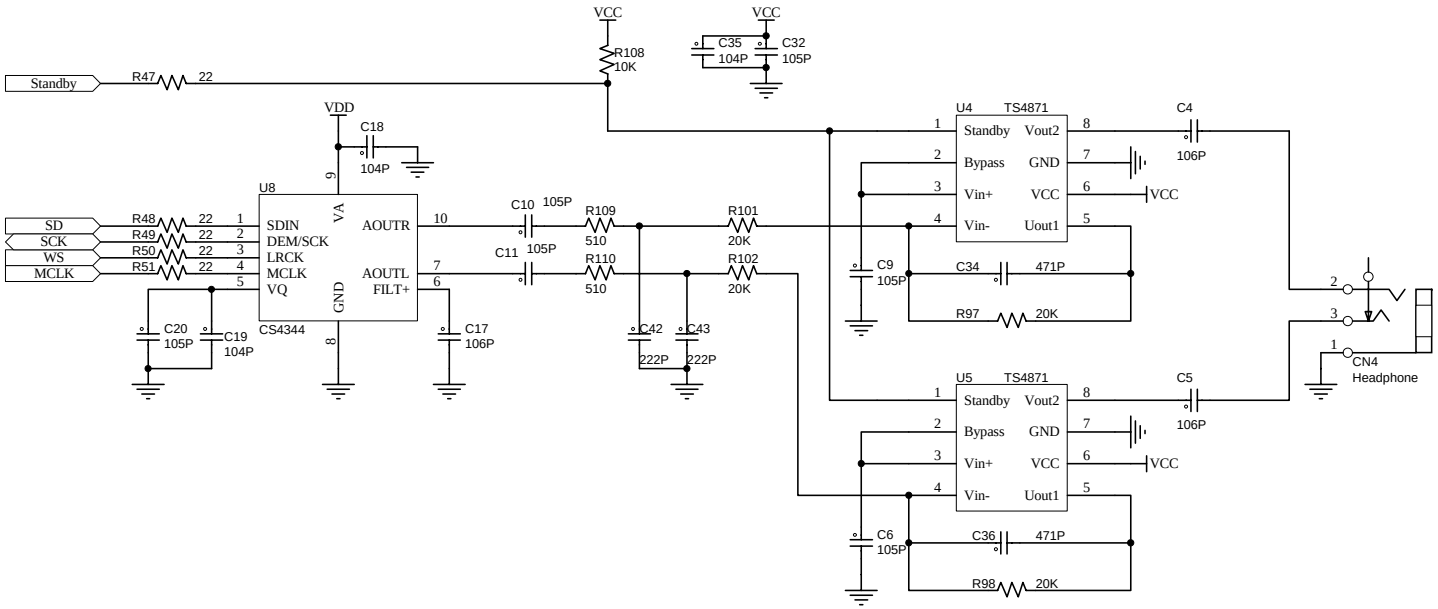
VCC
VCC
R108
10K
C35
104P
C32
105P
Standby
R47
22
VDD
C18
104P
U8
SD
SCK
WS
MCLK
R48
R49
R50
R51
22
SDIN
DEM/SCK
LRCK
MCLK
VQ
VA
GND
AOUTR
AOUTL
FILT+
CS4344
C20
105P
C19
104P
C17
106P
C10
105P
C11
105P
R109
510
R110
510
C42
222P
C43
222P
R101
20K
R102
20K
U4
TS4871
Standby
Bypass
Vin+
Vin-
Vout2
GND
VCC
Uout1
C4
106P
C9
105P
C34
471P
R97
20K
U5
TS4871
C5
106P
C6
105P
C36
471P
R98
20K
CN4
Headphone

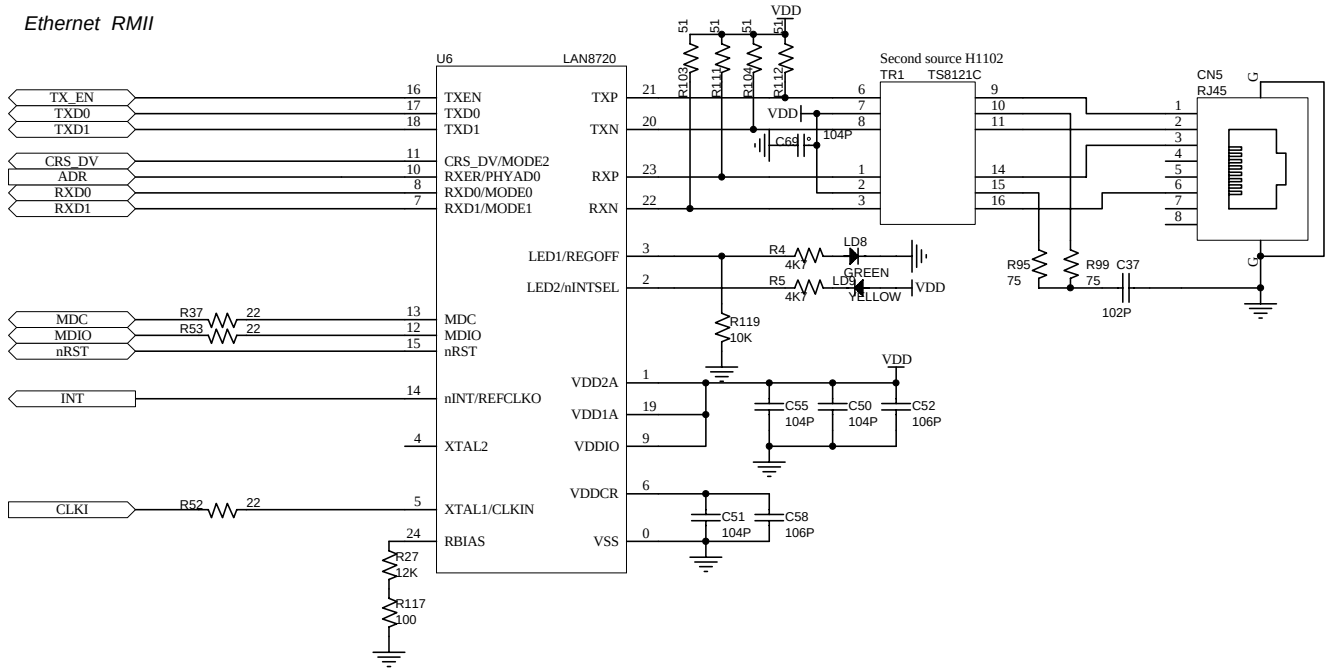
Ethernet RMII
U6
LAN8720
TX_EN
TXD0
TXD1
CRS_DV
ADR
RXD0
RXD1
MDC
MDIO
nRST
INT
CLKI
TXEN
TXD0
TXD1
CRS_DV/MODE2
RXER/PHYAD0
RXD0/MODE0
RXD1/MODE1
MDC
MDIO
nRST
nINT/REFCLKO
XTAL2
XTAL1/CLKIN
RBIAS
TXP
TXN
RXP
RXN
LED1/REGOFF
LED2/nINTSEL
VDD2A
VDD1A
VDDIO
VDDCR
VSS
R37 22
R53 22
R52 22
R27 12K
R117 100
R119 10K
R103 51
R111 51
R104 51
R112 51
VDD
C69 104P
Second source H1102
TR1 TS8121C
R4 4K7
R5 4K7
LD8 GREEN
LD9 YELLOW
C55 104P
C50 104P
C52 106P
C51 104P
C58 106P
R95 75
R99 75
C37 102P
CN5
RJ45

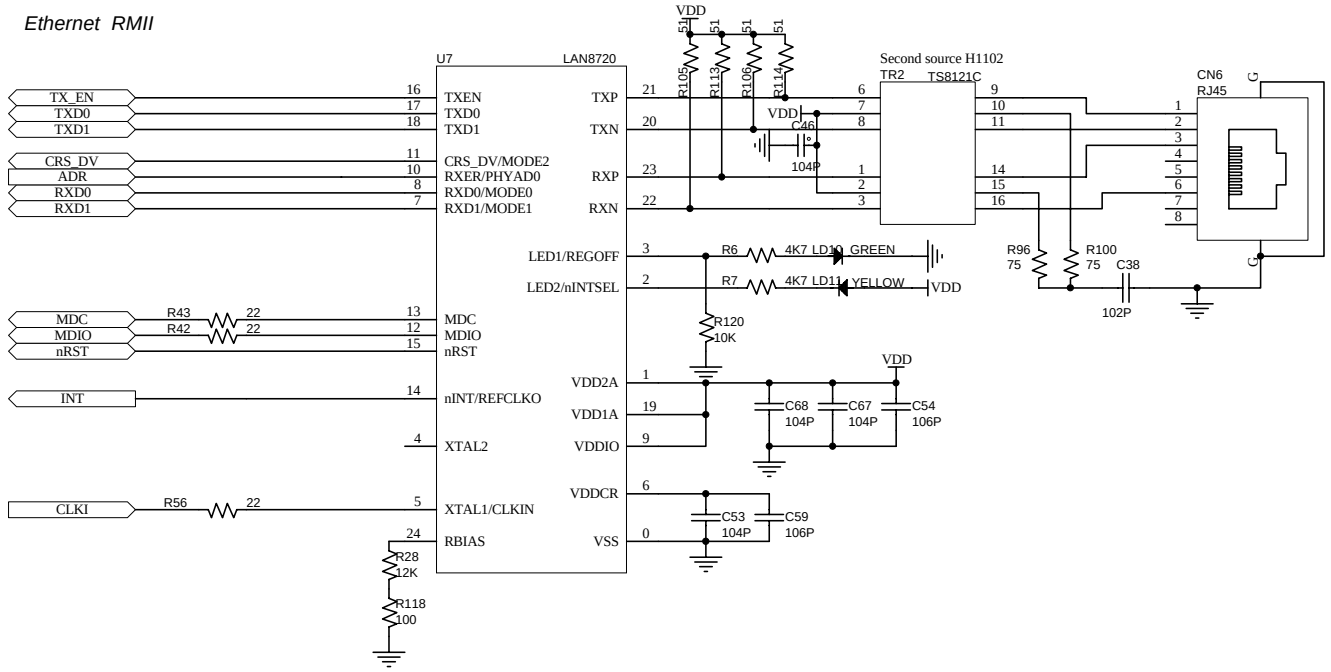
Ethernet RMII
U7
LAN8720
TX_EN
TXD0
TXD1
CRS_DV
ADR
RXD0
RXD1
MDC
MDIO
nRST
INT
CLKI
TXEN
TXD0
TXD1
CRS_DV/MODE2
RXER/PHYAD0
RXD0/MODE0
RXD1/MODE1
MDC
MDIO
nRST
nINT/REFCLKO
XTAL2
XTAL1/CLKIN
RBIAS
TXP
TXN
RXP
RXN
LED1/REGOFF
LED2/nINTSEL
VDD2A
VDD1A
VDDIO
VDDCR
VSS
VDD
R105
R113
R106
R114
51
C46
104P
Second source H1102
TR2
TS8121C
CN6
RJ45
R6
4K7 LD10 GREEN
R7
4K7 LD11 YELLOW
R120
10K
R96
75
R100
75
C38
102P
C68
104P
C67
104P
C54
106P
C53
104P
C59
106P
R43
R42
22
R56
R28
12K
R118
100

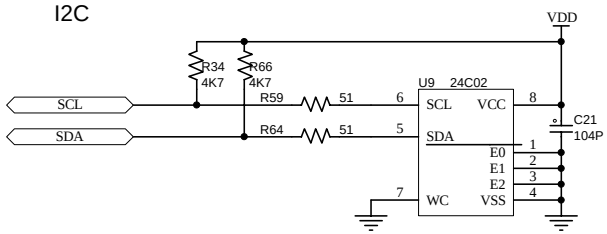
I2C
VDD
R34
4K7
R66
4K7
SCL
SDA
R59
51
R64
51
6
5
U9 24C02
SCL
SDA
WC
VCC
E0
E1
E2
VSS
8
1
2
3
4
7
C21
104P

SPI

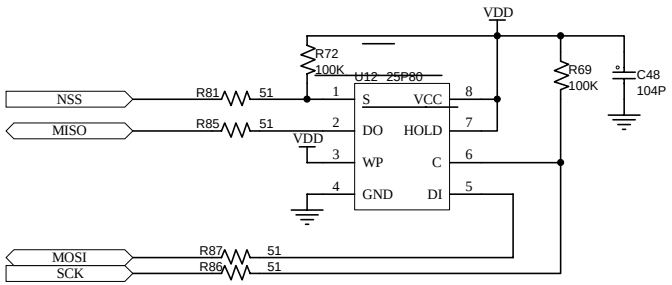
VDD
R72
100K
U12 25P80
R69
100K
C48
104P
NSS
MISO
R81
51
R85
51
VDD
1
2
3
4
S
DO
WP
GND
VCC
HOLD
C
DI
8
7
6
5
MOSI
SCK
R87
51
R86
51

CAN

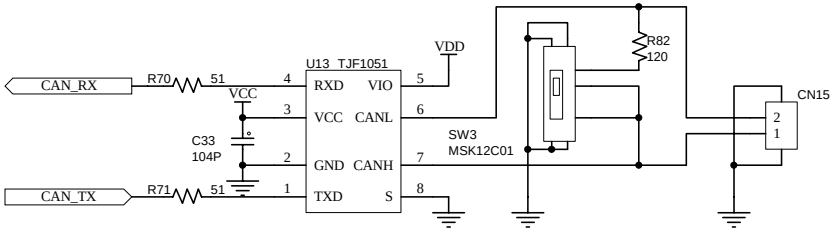
CAN_RX
R70
51
VCC
C33
104P
CAN_TX
R71
51
U13 TJF1051
RXD
VIO
VCC
CANL
GND
CANH
TXD
S
4
3
2
1
5
6
7
8
VDD
SW3
MSK12C01
R82
120
CN15
2
1

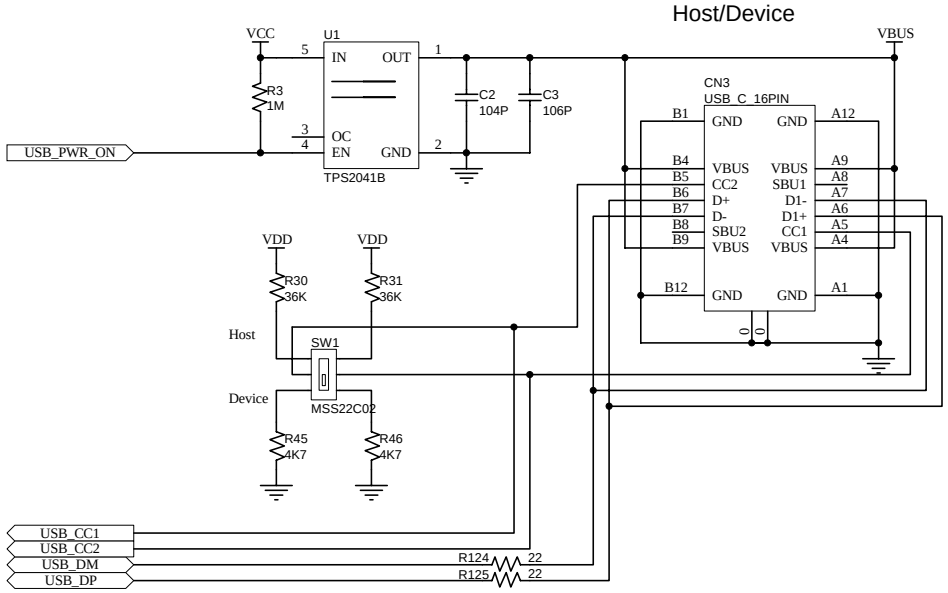
Host/Device
VCC
U1
IN
OUT
OC
EN
GND
TPS2041B
R3
1M
C2
104P
C3
106P
USB_PWR_ON
VBUS
CN3
USB_C_16PIN
GND
VBUS
CC2
D+
D-
SBU2
SBU1
D1-
D1+
CC1
VDD
R30
36K
R31
36K
Host
SW1
Device
MSS22C02
R45
4K7
R46
4K7
USB_CC1
USB_CC2
USB_DM
USB_DP
R124
R125
22

ADC

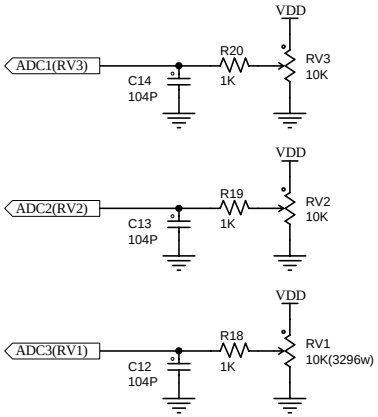
VDD
ADC1(RV3)
R20
1K
RV3
10K
C14
104P
VDD
ADC2(RV2)
R19
1K
RV2
10K
C13
104P
VDD
ADC3(RV1)
R18
1K
RV1
10K(3296w)
C12
104P

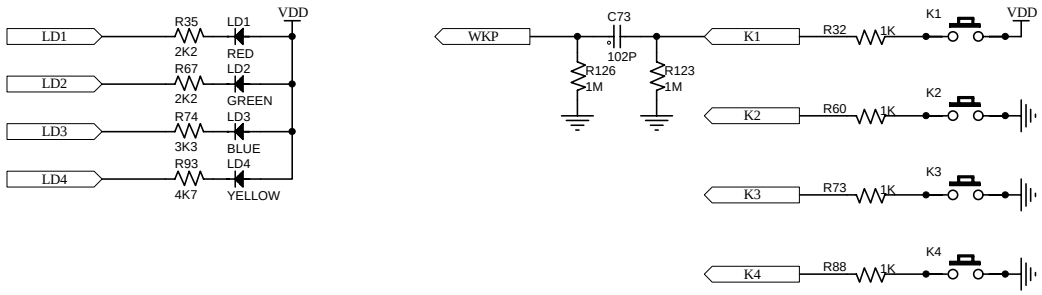
LED
LD1
R35
2K2
LD1
RED
VDD
LD2
R67
2K2
LD2
GREEN
LD3
R74
3K3
LD3
BLUE
LD4
R93
4K7
LD4
YELLOW
Key
WKP
C73
102P
R126
1M
R123
1M
K1
R32
1K
K1
VDD
K2
R60
1K
K2
K3
R73
1K
K3
K4
R88
1K
K4

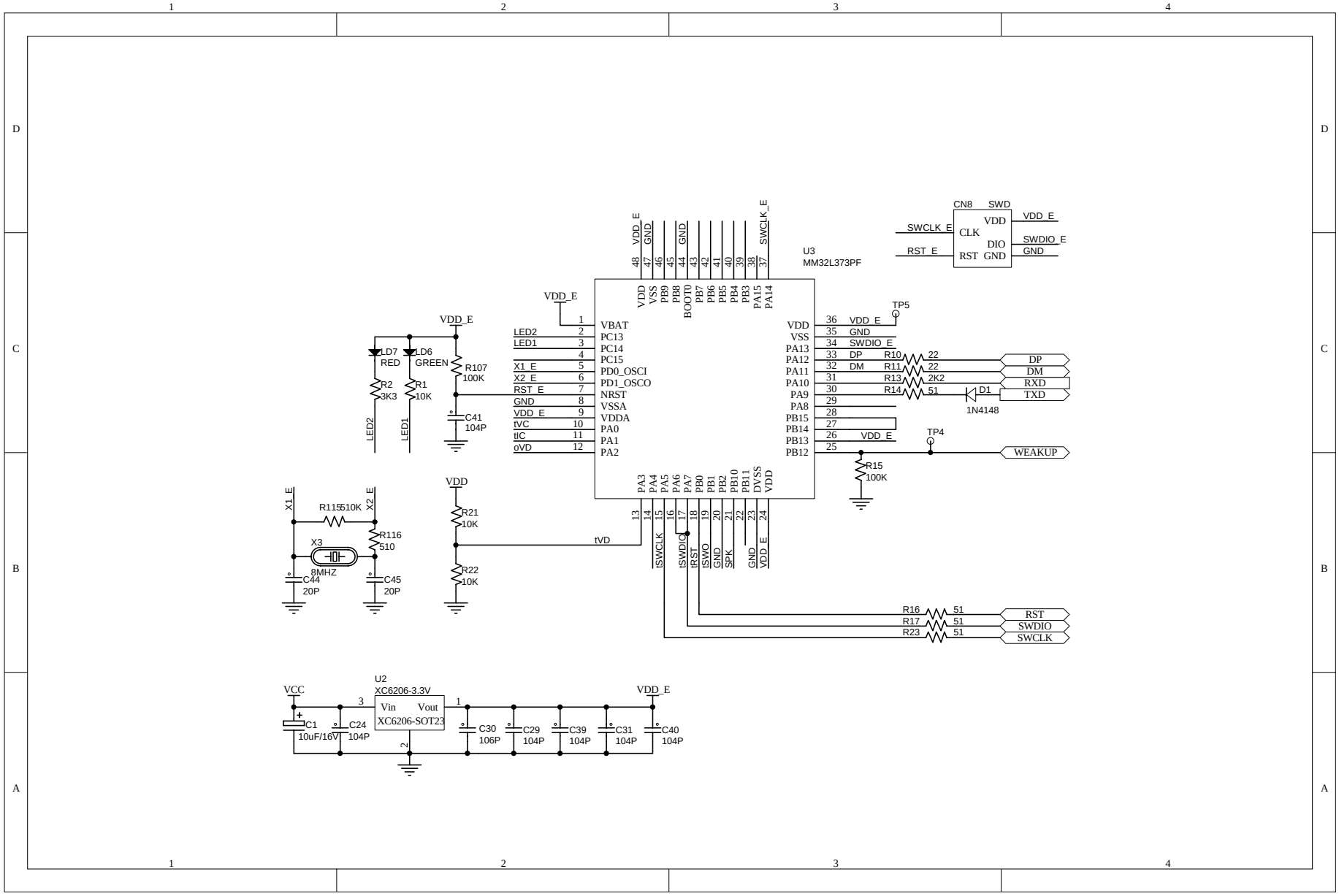
U3
MM32L373PF
VBAT
PC13
PC14
PC15
PD0_OSCI
PD1_OSCO
NRST
VSSA
VDDA
PA0
PA1
PA2
VDD
VSS
PB9
PB8
BOOT0
PB7
PB6
PB5
PB4
PB3
PA15
PA14
PA13
PA12
PA11
PA10
PA9
PA8
PB15
PB14
PB13
PB12
PA3
PA4
PA5
PA6
PA7
PB0
PB1
PB2
PB10
PB11
DVSS
GND
SWCLK_E
VDD_E
LED2
LED1
X1_E
X2_E
RST_E
tVC
tIC
oVD
DP
DM
RXD
TXD
WEAKUP
RST
SWDIO
SWCLK
tVD
tSWCLK
tSWDIO
tRST
tSWO
SPK
SWDIO_E
TP5
TP4
CN8 SWD
CLK
DIO
RST
R10 22
R11 22
R13 2K2
R14 51
D1
1N4148
R15 100K
R16 51
R17 51
R23 51
LD7 RED
LD6 GREEN
R2 3K3
R1 10K
R107 100K
C41 104P
R115 510K
R116 510
X3 8MHZ
C44 20P
C45 20P
R21 10K
R22 10K
U2
XC6206-3.3V
Vin
Vout
XC6206-SOT23
VCC
C1 10uF/16V
C24 104P
C30 106P
C29 104P
C39 104P
C31 104P
C40 104P

320x240 Color LCD

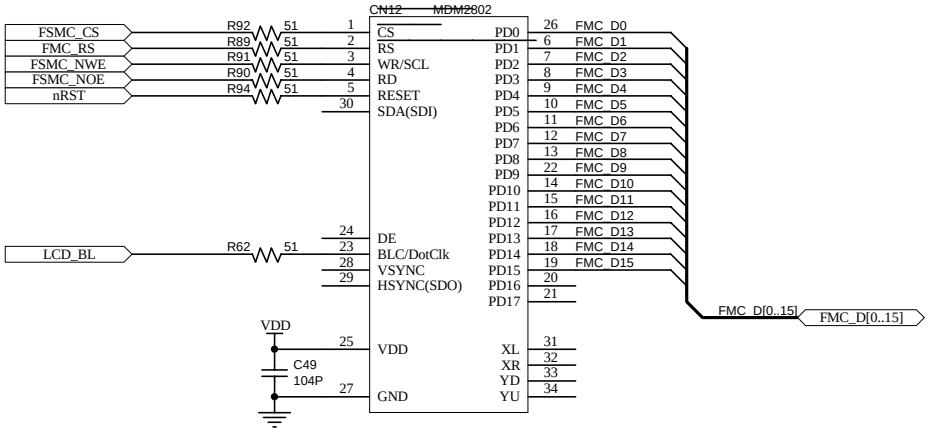

UART

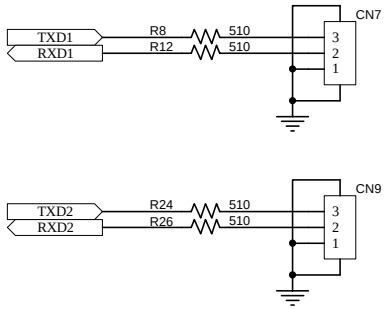
TXD1
RXD1
R8
R12
510
510
CN7
3
2
1
TXD2
RXD2
R24
R26
510
510
CN9
3
2
1

Buzzer

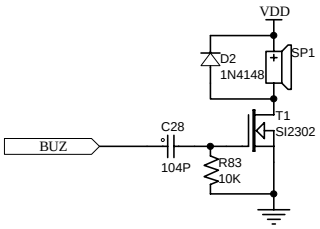

Connection

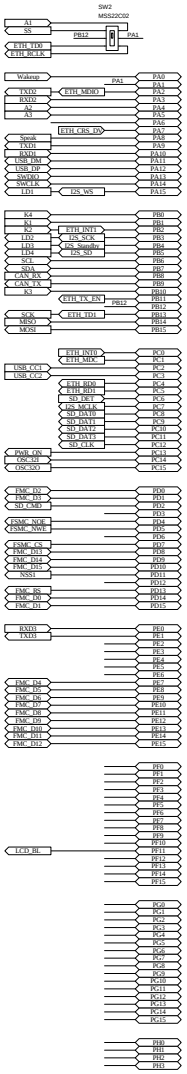

PA0/TIM2_CH1/TIM2_ETR/TIM5_CH1/TIM8_ETR/UART2_CTS/UART4_TX/ETH_MII_CRS/ADC123_IN0/COMP12_INP0/COMP1_INM2/WKP0
PA1/TIM2_CH2/TIM5_CH2/UART2_RTS/UART4_RX/ETH_MII_RX_CLK/ETH_RMII_REF_CLK/ADC123_IN1/COMP12_INP1
PA2/TIM2_CH3/TIM5_CH3/UART2_TX/CPT2_OUT/ETH_MDIO/ADC123_IN2/COMP12_INP2/COMP2_INM2/WKP2
PA3/TIM2_CH4/TIM5_CH4/UART2_RX/ETH_COL/ADC123_IN3/COMP12_INP3
PA4/SPI1_NSS/I2S1_WS/SPI3_NSS/I2S3_WS/UART5_TX/ADC12_IN4 /DAC1_OUT/COMP12_INM0
PA5/TIM2_CH1/TIM2_ETR/TIM8_CH1N/SPI1_SCK/I2S1_CK/UART5_RX/ADC12_IN5 /DAC2_OUT/COMP12_INM1
PA6/TIM1_BKIN/TIM3_CH1/TIM8_BKIN/SPI1_MISO/I2S1_MCK/CPT1_OUT/ADC12_IN6
PA7/TIM1_CH1N/TIM3_CH2/TIM8_CH1N/SPI1_MOSI/I2S1_SD/CRS_SYNC/ETH_MII_RX_DV/ETH_RMII_CRS_DV/ADC12_IN7
PA8/MCO1/TIM1_CH1
PA9/TIM1_CH2/I2C1_SCL/UART1_TX/USB_VBUS
PA10/TIM1_CH3/I2C1_SDA/UART1_RX/USB_ID
PA11/TIM1_CH4/UART1_CTS/CPT1_OUT/CAN1_RX/USBDM
PA12/TIM1_ETR/UART1_RTS/CPT2_OUT/CAN1_TX/USBDP
PA13/JTMS_SWDIO/USB_VBUS_ON
PA14/JTCK_SWCLK/I2C1_SDA
PA15/JTDI/TIM2_CH1/TIM2_ETR/I2C1_SCL/SPI1_NSS/I2S1_WS/SPI3_NSS/I2S3_WS

PB0/TIM1_CH2N/TIM3_CH3/TIM8_CH2N/UART6_TX/ETH_MII_RXD2/ADC12_IN8
PB1/TIM1_CH3N/TIM3_CH4/TIM8_CH3N/UART6_RX/ETH_MII_RXD3/ADC123_IN9
PB2 /BOOT1
PB3/JTDO/TRACESWO/TIM2_CH2/SPI1_SCK/I2S1_CK/SPI3_SCK/I2S3_CK
PB4/NJTRST/TIM3_CH1/SPI1_MISO/I2S1_MCK/SPI3_MISO/I2S3_MCK
PB5/TIM3_CH2/SPI1_MOSI/I2S1_SD/SPI3_MOSI/I2S3_SD/WKP4
PB6/TIM4_CH1/I2C1_SCL/UART1_TX/UART7_TX
PB7/TIM4_CH2/I2C1_SDA/UART1_RX/UART7_RX/FMC_NADV
PB8/TIM4_CH3/I2C1_SCL/CPT1_OUT/CAN1_RX/ETH_MII_TXD3
PB9/TIM4_CH4/I2C1_SDA/SPI2_NSS/I2S2_WS/CPT2_OUT/CAN1_TX
PB10/TIM2_CH3/I2C2_SCL/SPI2_SCK/I2S2_CK/UART3_TX/ETH_MII_RX_ER
PB11/TIM2_CH4/I2C2_SDA/UART3_RX/ETH_MII_TX_EN/ETH_RMII_TX_EN
PB12/TIM1_BKIN/SPI2_NSS/I2S2_WS/ETH_MII_TXD0/ETH_RMII_TXD0
PB13/TIM1_CH1N/SPI2_SCK/I2S2_CK/UART3_CTS/ETH_MII_TXD1/ETH_RMII_TXD1
PB14/TIM1_CH2N/TIM8_CH2N/SPI2_MISO/I2S2_MCK/UART3_RTS
PB15/TIM1_CH3N/TIM8_CH3N/SPI2_MOSI/I2S2_SD/WKP5

PC0/I2C1_SCL/ADC123_IN10
PC1/I2C1_SDA/ETH_MDC/ADC123_IN11
PC2/I2C2_SCL/SPI2_MISO/I2S2_MCK/ETH_MII_TXD2/ADC123_IN12
PC3/I2C2_SDA/SPI2_MOSI/I2S2_SD/ETH_MII_TX_CLK/ADC123_IN13
PC4/ETH_MI_RXD0/ETH_RMI_RXD0/ADC23_14
PC5/ETH_MI_RXD1/ETH_RMI_RXD1/ADC23_15/WKP3
PC6/TIM8_CH1/TIM8_CH1N/I2C1_SCL/SPI2_MISO/I2S2_MCK/UART6_TX
PC7/TIM8_CH2/TIM8_CH2N/I2C1_SDA/SPI3_MISO/I2S3_MCK/UART6_RX
PC8/TIM3_CH3/TIM8_CH3/I2C2_SCL/SDIO_D0
PC9/MCO2/TIM3_CH4/TIM8_CH4/I2C2_SDA/SDIO_D1
PC10/SPI3_SCK/I2S3_CK/UART3_TX/UART4_TX/SDIO_D2
PC11/SPI3_MISO/I2S3_MCK/UART3_RX/UART4_RX/SDIO_D3
PC12/SPI3_MOSI/UART5_TX/SDIO_CK
PC13/TAMP-RTC/WKP1
PC14/OSC32_IN
PC15 /OSC32_OUT

PD0/UART8_TX/CAN1_RX/FMC_DA2
PD1/UART8_RX/CAN1_TX/FMC_DA3
PD2/TIM3_ETR/UART5_RX/SDIO_CMD
PD3/SPI2_SCK/I2S2_CK/UART7_CTS/FMC_CLK
PD4/SPI3_SCK/I2S3_CK/UART2_RTS/FMC_NOE
PD5/SPI3_MISO/I2S3_MCK/UART2_TX/FMC_NWE
PD6/SPI3_MOSI/I2S3_SD/UART2_RX/FMC_NWAIT1
PD7/SPI3_NSS/I2S3_WS/FMC_NE1
PD8/UART3_TX/FMC_DA13
PD9/UART3_RX/FMC_DA14
PD10/I2C1_SCL/FMC_DA15
PD11/I2C1_SDA/UART3_CTS/FMC_A16
PD12/TIM4_CH1/SPI3_SCK/I2S3_CK/UART3_RTS/FMC_A17
PD13/TIM4_CH2/SPI3_MISO/I2S3_MCK/FMC_A18
PD14/TIM4_CH3/SPI3_MOSI/FMC_DA0
PD15/TIM4_CH4/SPI3_NSS/I2S3_WS/FMC_DA1

PE0/TIM4_ETR/UART8_RX/FMC_NBL0
PE1/UART8_TX/FMC_NBL1
PE2/TRACECLK/SPI2_SCK/I2S2_CK/ETH_MII_TXD3/FMC_A23
PE3/TRACED0/SPI2_NSS/I2S2_WS/FMC_A19
PE4/TRACED1/SPI2_NSS/I2S2_WS/FMC_A20
PE5/TRACED2/I2C2_SCL/SPI2_MISO/I2S2_MCK/FMC_A21
PE6/TRACED3/I2C2_SDA/SPI2_MOSI/I2S2_SD/FMC_A22
PE7/TIM1_ETR/UART7_RX/FMC_DA4
PE8/TIM1_CH1N/UART7_TX/FMC_DA5
PE9/TIM1_CH1/FMC_DA6
PE10/TIM1_CH2N/FMC_DA7
PE11/TIM1_CH2/SPI1_NSS/I2S1_WS/FMC_DA8
PE12/TIM1_CH3N/SPI1_SCK/I2S1_CK/FMC_DA9
PE13/TIM1_CH3/SPI1_MISO/I2S1_MCK/FMC_DA10
PE14/TIM1_CH4/SPI1_MOSI/I2S1_SD/FMC_DA11
PE15/TIM1_BKIN/FMC_DA12

PF0/FMC_A0
PF1/FMC_A1
PF2/FMC_A2
PF3/FMC_A3
PF4/FMC_A4
PF5/FMC_A5
PF6/ADC3_IN4
PF7/ADC3_IN5
PF8/ADC3_IN6
PF9/ADC3_IN7
PF10/ADC3_IN8
PF11
PF12/FMC_A6
PF13/FMC_A7
PF14/FMC_A8
PF15/FMC_A9

PG0/FMC_A10
PG1/FMC_A11
PG2/FMC_A12
PG3/FMC_A13
PG4/FMC_A14
PG5/FMC_A15
PG6
PG7
PG8
PG9/FMC_NE2
PG10/FMC_NE3
PG11
PG12/FMC_NE4
PG13/FMC_A24
PG14/FMC_A25
PG15

PH2
PH3/BOOT0